RSP Supply Inc. | https://www.rspsupply.com

LD6A LED SignaLight Towers

Unique Striped Design Improves Visibility

Key features of the LD6A LED SignaLight Towers include:

- The striped design with non-illuminated area between the lenses makes the illuminated color very visible.
- Unique oval lens shape provides high-visibility from different directions.
- Five different mounting styles available: frame mount, wall mount, direct mount and pole mount (round or L-shaped bracket).
- Clear lens models available to clearly distinguish between illuminated and non-illuminated lenses.
- Custom configuration is possible.
- Flashing cycle: 1.75Hz (approx. 105 flashes per minute) conforms to international standard IEC 60073.
- Alarm (3.3kHz, 2 different styles) can be heard in 360° degrees. Adjustable volume (70 to 90dB).
- Degree of protection: IP65 Steady units and IP54 Flashing units (using frame, wall, direct and pole mount with round base), IP23 Steady and Flashing units using pole mount with L-shaped bracket.

Assembled Products

Mounting Style	Tiers	LED Color Code	Steady		Steady/Flashing/Alarm	
			Part Number	Weight (approx.)	Part Number	Weight (approx.)
G: Frame Mount	1	R, Y, S, G, W	LD6A-1GQ*-□	220g	LD6A-1GZQ*-□	310g
	2	RY, RG	LD6A-2GQ*-□□	260g	LD6A-2GZQ*-□□	350g
	3	RYS, RYG	LD6A-3GQ*-□□□	300g	LD6A-3GZQ*-□□□	390g
	4	RYSG	LD6A-4GQ*-□□□□	340g	LD6A-4GZQ*-□□□□	430g
	5	RYSGW	LD6A-5GQ*-□□□□□	380g	LD6A-5GZQ*-□□□□□	470g
W: Wall Mount	1	R, Y, S, G, W	LD6A-1WQ*-□	225g	LD6A-1WZQ*-□	315g
	2	RY, RG	LD6A-2WQ*-□□	265g	LD6A-2WZQ*-□□	355g
	3	RYS, RYG	LD6A-3WQ*-□□□	305g	LD6A-3WZQ*-□□□	395g
	4	RYSG	LD6A-4WQ*-□□□□	345g	LD6A-4WZQ*-□□□□	435g
	5	RYSGW	LD6A-5WQ*-□□□□□	385g	LD6A-5WZQ*-□□□□□	475g
D: Direct Mount	1	R, Y, S, G, W	LD6A-1DQ*-□	185g	LD6A-1DZQ*-□	275g
	2	RY, RG	LD6A-2DQ*-□□	225g	LD6A-2DZQ*-□□	315g
	3	RYS, RYG	LD6A-3DQ*-□□□	265g	LD6A-3DZQ*-□□□	355g
	4	RYSG	LD6A-4DQ*-□□□□	305g	LD6A-4DZQ*-□□□□	395g
	5	RYSGW	LD6A-5DQ*-□□□□□	345g	LD6A-5DZQ*-□□□□□	435g
P: Pole Mount (with base)	1	R, Y, S, G, W	LD6A-1PQ*-□	645g	LD6A-1PZQ*-□	735g
	2	RY, RG	LD6A-2PQ*-□□	685g	LD6A-2PZQ*-□□	775g
	3	RYS, RYG	LD6A-3PQ*-□□□	725g	LD6A-3PZQ*-□□□	815g
	4	RYSG	LD6A-4PQ*-□□□□	765g	LD6A-4PZQ*-□□□□	855g
	5	RYSGW	LD6A-5PQ*-□□□□□	805g	LD6A-5PZQ*-□□□□□	895g
K: Pole Mount (with L-shaped bracket)	1	R, Y, S, G, W	LD6A-1KQ*-□	640g	LD6A-1KZQ*-□	730g
	2	RY, RG	LD6A-2KQ*-□□	680g	LD6A-2KZQ*-□□	770g
	3	RYS, RYG	LD6A-3KQ*-□□□	720g	LD6A-3KZQ*-□□□	810g
	4	RYSG	LD6A-4KQ*-□□□□	760g	LD6A-4KZQ*-□□□□	850g
	5	RYSGW	LD6A-5KQ*-□□□□□	800g	LD6A-5KZQ*-□□□□□	890g

Specify housing color code in place of *: B (black), W (light gray)
Specify illumination color in place of □ starting with the top tier. State the LED color code from the left.
R (red), Y (yellow), S (blue), G (green), W (pure white)
Example: When the LED color is RYGSW => **LD6A-5GQW-RYGSW**
Clear lens type also available. Specify "C" after the LED color code.
Example:
LD6A-5GQW-RYSGW => **LD6A-5GQW-RYSGWC**

RSP Supply Inc. | https://www.rspsupply.com

Combination of LED Color and Lens Color

LED Color	Color Lens Type	Clear Lens Type
R: Red	Red lens	Clear lens
Y: Yellow	Yellow lens	Clear lens
S: Blue	Blue lens	Clear lens
G: Green	Green lens	Clear lens
W: White	Clear lens	

For white (W) LED, a clear lens is used in both color and clear lens configurations.

Mounting Parts Included

Mounting Style	Supplied Parts
G: Frame mount	M4 screw (4 pcs)*, M4 spring washer (4 pcs)*, M4 plain washer (4 pcs)*, M5 screw (2 pcs), M5 spring washer (2 pcs), M5 plain washer (2 pcs), bracket (1 pc)
W: Wall mount	M4 screw (20 mm) (4 pcs), M4 screw (8 mm) (4 pcs)*, M4 spring washer (8 pcs)* M4 plain washer (8 pcs)*, M4 nut (4 pcs), bracket (1 pc), gasket (1 pc)
D: Direct mount	M5 screw (4 pcs)*, M5 spring washer (4 pcs)*, M5 plain washer (4 pcs)*, M5 nut (4 pcs)*, O-ring (4 pcs), gasket (1 pc)
P: Pole mount (with base)	M5 screw (4 pcs), M5 spring washer (4 pcs), M5 plain washer (4 pcs), M5 nut (4 pcs), O-ring (4 pcs), gasket (1 pc)
K: Pole mount (with L-shaped bracket)	M22 plain washer 2 (pcs), M22 nut (2 pcs), bracket (1 pc)

*For black housing, black screws and washers are supplied. For light gray housing, silver screws and washers are supplied.

Base Module

Style	Mounting Style	Part Number		Notes
		Steady	Steady/Flashing/Alarm	
	Frame Mount	LD6A-0GQ*	LD6A-0GZQ*	A top cap is supplied.
	Wall Mount	LD6A-0WQ*	LD6A-0WZQ*	
	Direct Mount	LD6A-0DQ*	LD6A-0DZQ*	
	Pole Mount (with base)	LD6A-0PQ*	LD6A-0PZQ*	
	Pole Mount (with L-shaped bracket)	LD6A-0KQ*	LD6A-0KZQ*	

Specify a housing color code in place of *: B (black), W (light gray)
Do not supply power to the base module without connecting LED modules.

LED Module

Style		Lens	Part Number	LED Color Code
	Black	Color lens	LD9Z-6ALB-☐	R, Y, S, G, W
		Clear lens	LD9Z-6ALB-☐C	R, Y, S, G
	Light gray	Color lens	LD9Z-6ALW-☐	R, Y, S, G, W
		Clear lens	LD9Z-6ALW-☐C	R, Y, S, G

Specify an LED color code in place of ☐: R (red), Y (yellow), S (blue), G (green), W (white)
When using white (W) with a clear lens, order LD9Z-6ALB-W (black housing) or LD9Z-6ALW-W (light gray housing).

Center Set Screw

Item		Part Number	Notes
	1 tier	LD9Z-6AC1	A plain washer and spring washer are supplied.
	2 tiers	LD9Z-6AC2	
	3 tiers	LD9Z-6AC3	
	4 tiers	LD9Z-6AC4	
	5 tiers	LD9Z-6AC5	

RSP Supply Inc. | https://www.rspsupply.com

Ordering Examples

[Ex. 1] When ordering LD6A-3PQW-RYG as sub-component parts, specify the following:
Pole mount (with base), steady, light gray housing, 3 tiers, color lens LED modules with Red, Yellow, and Green LED

Base module (pole mount with base, steady, light gray housing)	LD6A-0PQW	1 piece
LED module (red LED with color lens, light gray housing)	LD9Z-6ALW-R	1 piece
LED module (yellow LED with color lens, light gray housing)	LD9Z-6ALW-Y	1 piece
LED module (green LED with color lens, light gray housing)	LD9Z-6ALW-G	1 piece
Center screw set (3 tiers)	LD9Z-6AC3	1 piece

[Ex. 2] When ordering LD6A-5WZQB-RYSGWC as sub-component parts, specify the following:
Wall mount, steady/flashing/alarm, black housing, 5 tiers, clear lens LED modules with Red, Yellow, Blue, Green, and Pure white LED

Base module (wall mount, steady/flashing/alarm, black housing)	LD6A-0WZQB	1 piece
LED module (red LED with clear lens, black housing)	LD9Z-6ALB-RC	1 piece
LED module (yellow LED with clear lens, black housing)	LD9Z-6ALB-YC	1 piece
LED module (blue LED with clear lens, black housing)	LD9Z-6ALB-SC	1 piece
LED module (green LED with clear lens, black housing)	LD9Z-6ALB-GC	1 piece
LED module (pure white LED with clear lens, black housing)	LD9Z-6ALB-W	1 piece
Center screw set (5 tiers)	LD9Z-6AC5	1 piece

Replacement Parts

Item	Description		Part Number	Notes
	Top Cap	Black	LD9Z-6ATB	A top cap is supplied with a base module.
		Light gray	LD9Z-6ATW	
	L-shaped Bracket	Metal (chrome-plated)	LD9Z-6AK	Two plain washers and two nuts are supplied.

RSP Supply Inc. | https://www.rspsupply.com

Specifications

Specifications

Safety Standards	IEC60947-5-1, EN60947-5-1, UL508, CSA C22.2 No.14		
Operating Temperature	–25 to +55°C (no freezing)		
Operating Humidity	45 to 85% RH (no condensation)		
Storage Temperature	–40 to +75°C (no freezing)		
Overvoltage Category	III (IEC60664-1)		
Impulse Withstand Voltage	800V (IEC60947-1)		
Insulation Resistance	100 MΩ minimum (500V DC megger)		
Dielectric Strength	Between live and dead parts: 1000V AC, 1 minute		
Pollution Degree	3		
Corrosion Immunity	Atmosphere free from corrosive gases		
Vibration Resistance	Operating extremes: 10 to 55Hz, amplitude 0.5 mm		
Shock Resistance	Operating extremes: 147 m/s², 6 shocks each in 6 axes		
Degree of Protection (IEC60529)	Steady	frame mount, wall mount, direct mount, pole mount with base	IP65
	Steady	pole mount with L-shaped bracket	IP23
	Flashing/ Alarm	frame mount, wall mount, direct mount, pole mount with base	IP54
	Flashing/ Alarm	pole mount with L-shaped bracket	IP23
Housing Color	Black, Light gray		
Material	Housing: ABS resin Lens: AS resin Pole: Steel (nickel-chrome plated) Pole base: Diecast aluminum		
Wire	22AWG		

Functional Specifications

Rated Insulation Voltage		60V		
Operating Voltage		24V AC/DC ±10%		
Rated Voltage (Ue)		24V AC/DC		
LED Color Code		R (red), Y (yellow), S (blue), G (green), W (white)		
LED	Illumination Color	R, Y	S, G	W
	Rated Current (per tier)	25mA	30mA	20mA
	Power Consumption (per tier)	0.6W	0.75W	0.5W
LED Life (Note)		Approx. 30,000 hours (until brightness is reduced to 50% of the initial value in a 25°C operating environment)		
Flashing Cycle (IEC60073)		Approx. 105 flashes per minute (1.75 Hz)		
Alarm	Alarm Cycle	Alarm 1: approx. 700 times per minute Alarm 2: approx. 35 times per minute		
	Current Draw	110mA max.		
	Inrush Current	AC: 400mA max. DC: 250mA max.		
	Alarm Volume	70 to 90dB, at 1m (volume adjustable)		
	Acoustic Frequency	Approx. 3.3kHz		

Note: Life of the LED varies according to operating conditions and environment.

External Contact Ratings

LED	AC Contact Capacity (per tier)	Current Capacity	100mA min.
		Dielectric Strength	35V AC min.
	DC Contact Capacity, Transistor Capacity (per tier)	Current Capacity	100mA min.
		Dielectric Strength	35V min.
		Leakage Current	0.1mA max.
Alarm	AC Contact Capacity (per alarm)	Current Capacity	400mA min.
		Dielectric Strength	35V AC min.
	DC Contact Capacity, Transistor Capacity (per alarm)	Current Capacity	300mA min.
		Dielectric Strength	35V min.
		Leakage Current	0.1mA max.

RSP Supply Inc. | https://www.rspsupply.com

Dimensions (Steady Light)

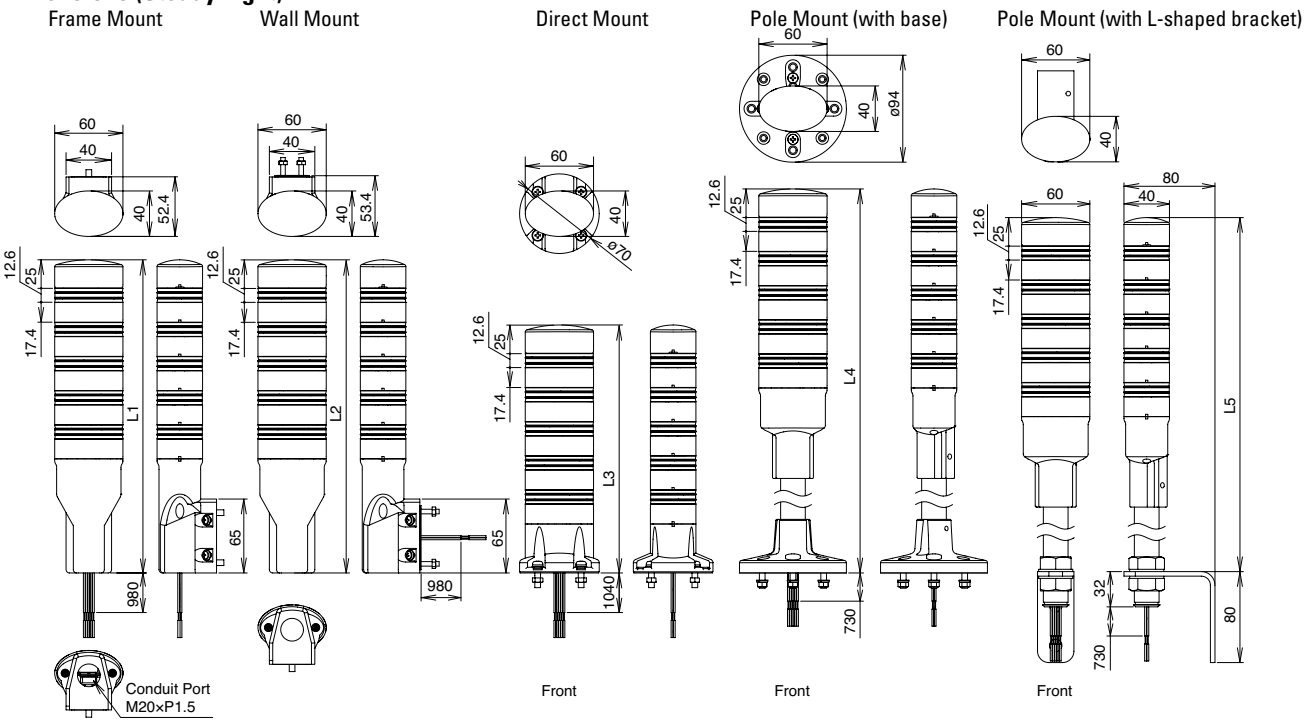

Dimension Table

Tiers	Frame Mount (L1)	Wall Mount (L2)	Direct Mount (L3)	Pole Mount	
				w/ base (L4)	w/ L-shaped bracket (L5)
1	156	156	98	408	372
2	186	186	128	438	402
3	216	216	158	468	432
4	246	246	188	498	462
5	276	276	218	528	492

Panel Cut-Out

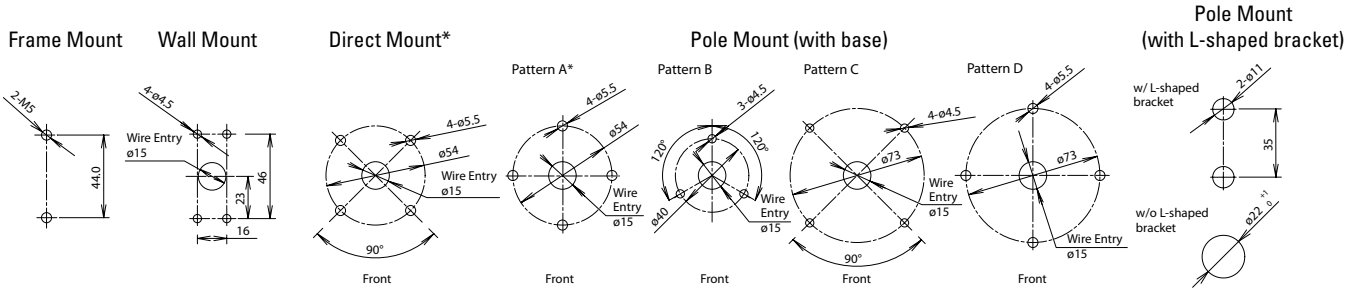

*Complies with IEC60947-5-1.

Wiring Example (Steady Light)

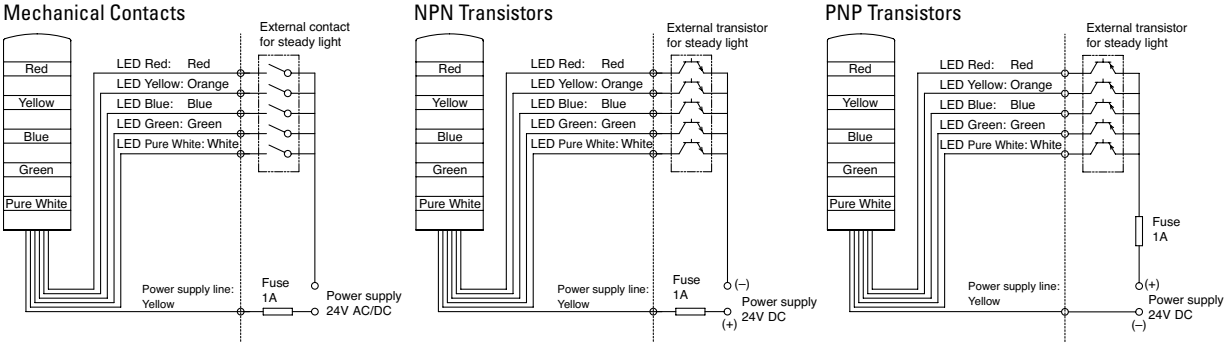

RSP Supply Inc. | https://www.rspsupply.com

Dimensions (Steady/Flashing/Alarm)

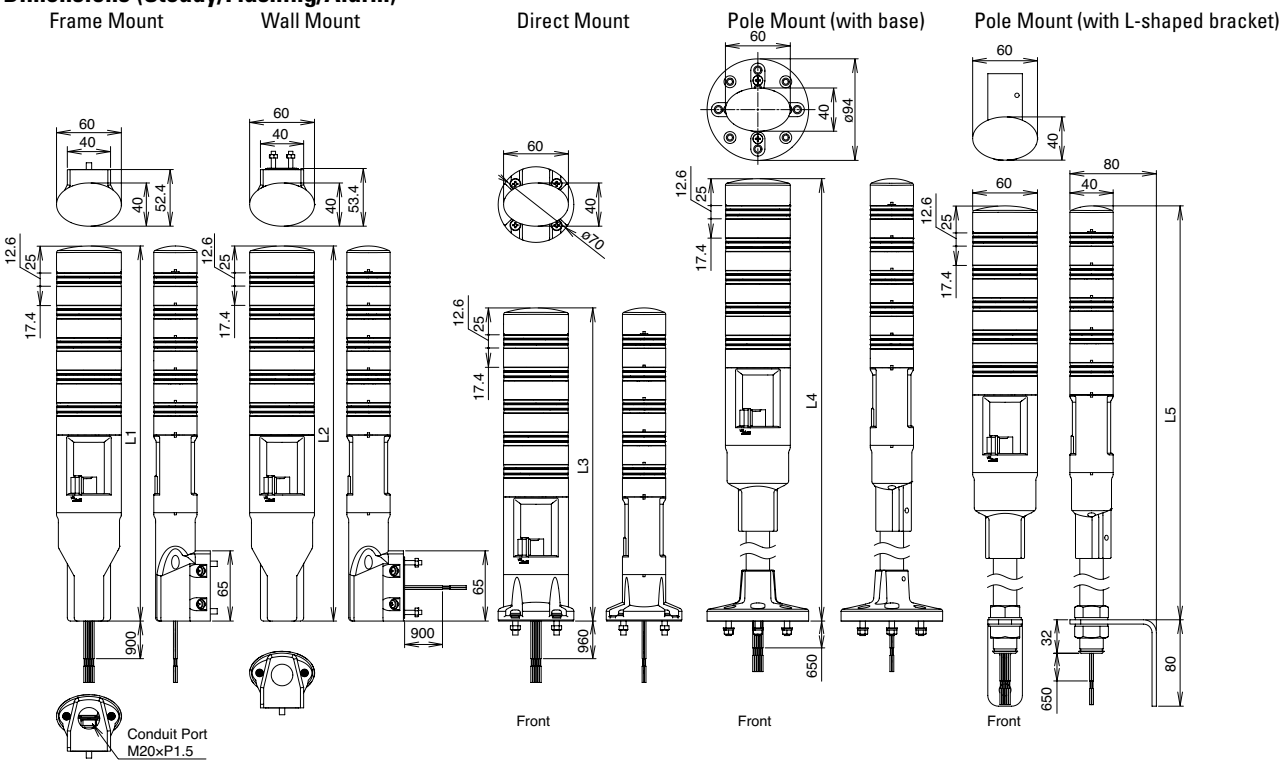

Dimension Table

Tiers	Frame Mount (L1)	Wall Mount (L2)	Direct Mount (L3)	Pole Mount	
				w/ base (L4)	w/ L-shaped bracket (L5)
1	228	228	170	480	444
2	258	258	200	510	474
3	288	288	230	540	504
4	318	318	260	570	534
5	348	348	290	600	564

Panel Cut-Out

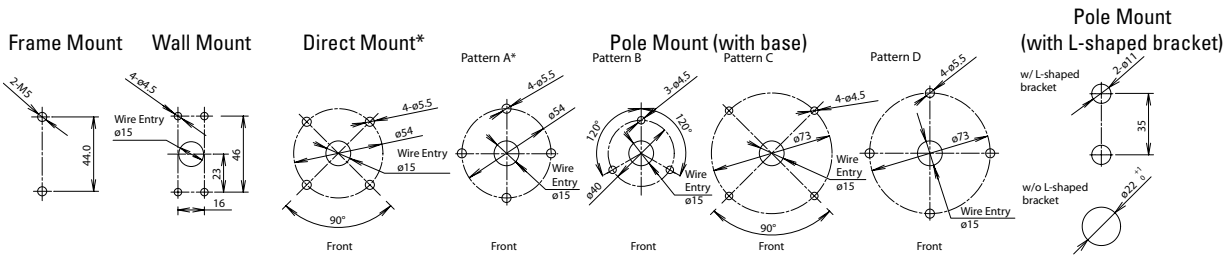

*Complies with IEC60947-5-1.

RSP Supply Inc. | https://www.rspsupply.com

Wiring Example (Flashing Light and Alarm)

Mechanical Contacts

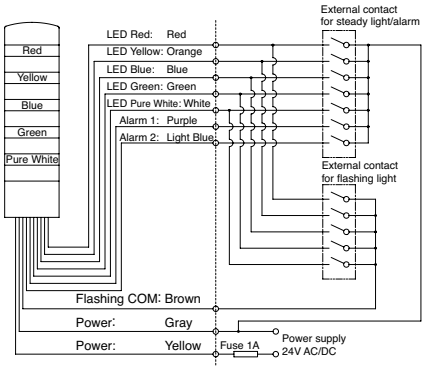

NPN Transistors

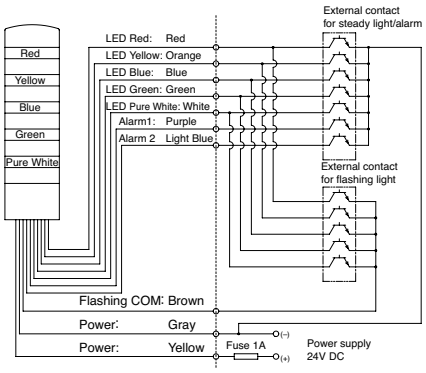

PNP Transistors

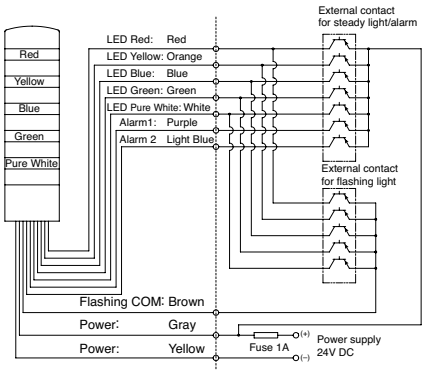

Safety Precautions

- Turn off the power to the LD6A before mounting, removing, wiring or assembling the LED module. Make sure the wiring is done correctly otherwise electrical shock or fire may result.
- Mount the LD6A on a solid surface not subject to vibrations.
- Do not mount the LD6A upside-down or horizontally.
- Do not leave the LD6A without a cap or unassembled.
- Install the supplied gasket, otherwise the waterproof seal will be compromised.
- Do not apply any chemicals that may corrode the plastic materials.
- If the LD6A is subjected to strong vibrations, the hexagon socket screw may become loose. Take measures to prevent loosening. (See the figure below.)

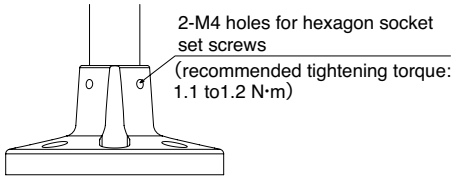

- Do not loosen any screws if the tightening torque is not specified.

Instructions

Mounting

- See drawing below regarding the mounting of the LD6A.
- For panel cut-out dimensions, see pages 9 and 10.
- Postion the LD6A to make sure the alarm sound is the loudest. (Steady/flashing/alarm type)

Frame Mounting

1. Insert two nuts in the frame, and attach the bracket using two M5 screws. Recommended tightening torque: 2.6 to 2.7 N·m
2. Mount the LD6A to the bracket using four M4 screws. Recommended tightening torque: 1.6 to 1.7 N·m

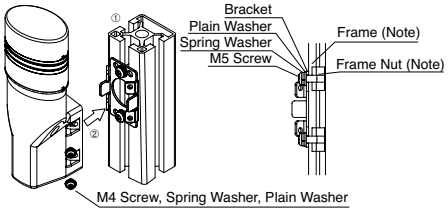

Note: See table below for typical examples of frames and nuts. Consult the manufacturer of the frame for the installation method of the frame nut.

Examples of recommended frames and frame nuts

Frame Size	Frame	Frame Nut	Manufacturer
☐30 mm*	SFF-302	SFB-001 SFB-4B5 SFB-101	SUS Corporation (Japan)
☐40 mm	SFF-402	SFB-008 SFB-4A5 SFB-108	

*The mounting bracket for the housing is 40 mm.

When using a frame mount type, be sure to use flexible conduit, otherwise the waterproof seal will be compromised.

Refer to the "Example of Flexible Conduit" shown on the right.

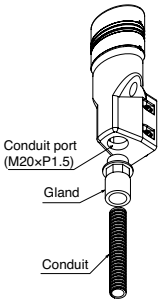

Example of Flexible Conduit

Conduit Port Size	M20
Gland	AL16/M20/A/BL
Conduit	PAFS16BL
Manufacturer	Adaptaflex

RSP Supply Inc. | https://www.rspsupply.com

Wall Mounting

1. Make four tapped holes in the mounting panel and mount the bracket and gasket using four screws (M4 x 20).
   Recommended tightening torque: 1.6 to 1.7 N·m
2. Mount the LD6A to the bracket using four screws (M4 x 8).
   Recommended tightening torque: 1.6 to 1.7 N·m

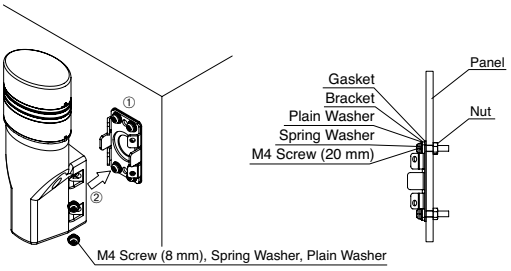

Direct Mounting

Recommended tightening torque: 2.6 to 2.7 N·m

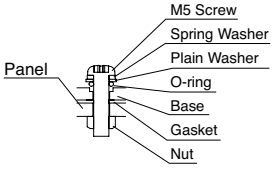

Pole Mounting (with base)

The pole mount type can be installed in four ways. The recommended mounting method (pattern A from page 9 or 10) is described below.

Recommended tightening torque: 2.6 to 2.7 N·m (M5 screw)

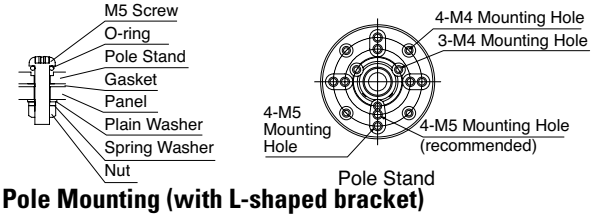

Pole Mounting (with L-shaped bracket)

1. Using L-shaped bracket
Recommended tightening torque: 10 to 11 N·m (M10)
Recommended tightening torque: 25 to 26 N·m (M22)

2. Not using L-shaped bracket
Remove the bushing, hexagonal nut (M22), plain washer, and L-shaped bracket from the LD6A and install in the following order: plain washer, hexagonal nut (M22), and bushing.
Recommended tightening torque: 25 to 26 N·m (M22)

1. Using L-shaped bracket 2. Not using L-shaped bracket

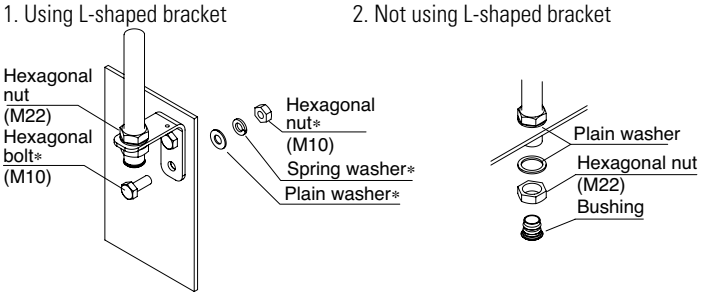

The parts marked with * are not supplied and should be provided by the user.

Replacement and Addition of LED Modules

- Make sure to turn power off.
- Insert a flat screwdriver into the cap recess as shown below, lift up the cap, and remove with your hands. Use a flat screwdriver with maximum 1-mm thick and 7-mm wide tip.
- Remove the center screw before reassembling the LED modules.
- When assembling the LED modules, make sure to align the recess of the cap with the recess of the LED module. Otherwise, damage may result.
  Recommended tightening torque: 0.4 to 0.5 N·m.

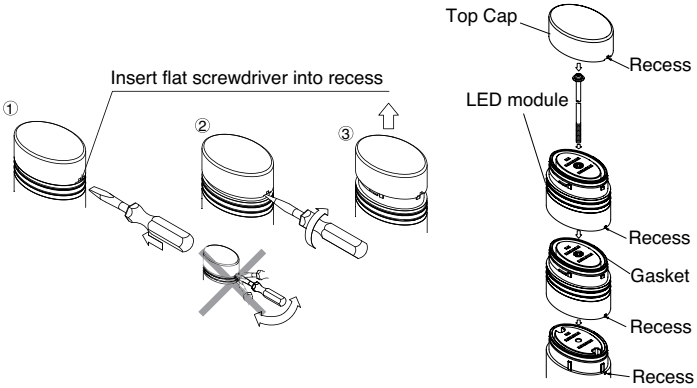

- Note the correct orientation when assembling the LED modules.
- Tighten the screws to the recommended tightening torque. The LED module may be damaged if the screw is loose during operation.
- Do not touch the metal plug on the LED module. Otherwise, LED elements maybe damaged due to static electricity.
- Use a maximum of 5 tiers.
- Select the correct screw length depending on the number of tiers.
- Do not remove the gasket from the LED module. Otherwise, the waterproof seal will be compromised.

Wiring

- For wiring, see the wiring diagrams on pages 782 and 784.
- Incorrect wiring may damage the internal circuit.
- Be sure to insulate unused wires.
- Connect a 1A fuse to the power line as shown in the Wiring Examples on pages 782 and 784.
- Use a UL listed external fuse holder.
- Use a class 2 power supply only.
- When using LED modules of the same color for two or more tiers, determine contact capacity in referencet to the LED current, because only one wire is used to light all tiers of the same color.
- Do not apply voltage to flashing (brown) lines.
- Do not connect flashing (brown) line to the power lines. The internal circuit may be damaged.
- Do not turn on steady and flashing circuits simultaneously.
- Do not turn on alarms 1 and 2 simultaneously.

RSP Supply Inc. | https://www.rspsupply.com

Wire Color

Wire Color	Steady	Steady, Flashing, Alarm
Red	LED Module – Red	LED Module – Red
Orange	LED Module – Yellow	LED Module – Yellow
Blue	LED Module – Blue	LED Module – Blue
Green	LED Module – Green	LED Module – Green
White	LED Module – White	LED Module – White
Purple	—	Alarm 1
Light Blue	—	Alarm 2
Brown	—	Flashing COM
Gray	—	Power Line
Yellow	Power Line	Power Line

For information on external contacts, see "External Contact Ratings" on page 781.

Alarm Volume Adjustment

- Move the volume adjustment to the right or left to change the volume.
- When the adjustment lever is all the way to the right the volume is at its maximum.
- The adjustment lever may be damaged if forced open or closed.

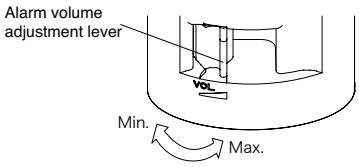

High Temperature Limitations

The external temperature cannot exceed 50ºC when all tiers are lit at the same time in the following combinations:

1. Three tiers
   Two or more tiers of blue and green (example: Red-Green-Blue, Green-Green-Red)
2. Four or five tiers (example: Red-Yellow-Green-White, Red-Yellow-Blue-Green-White)